FLEXIBLE CLUTCH AND INSTALLATION COMPONENTS: D100A

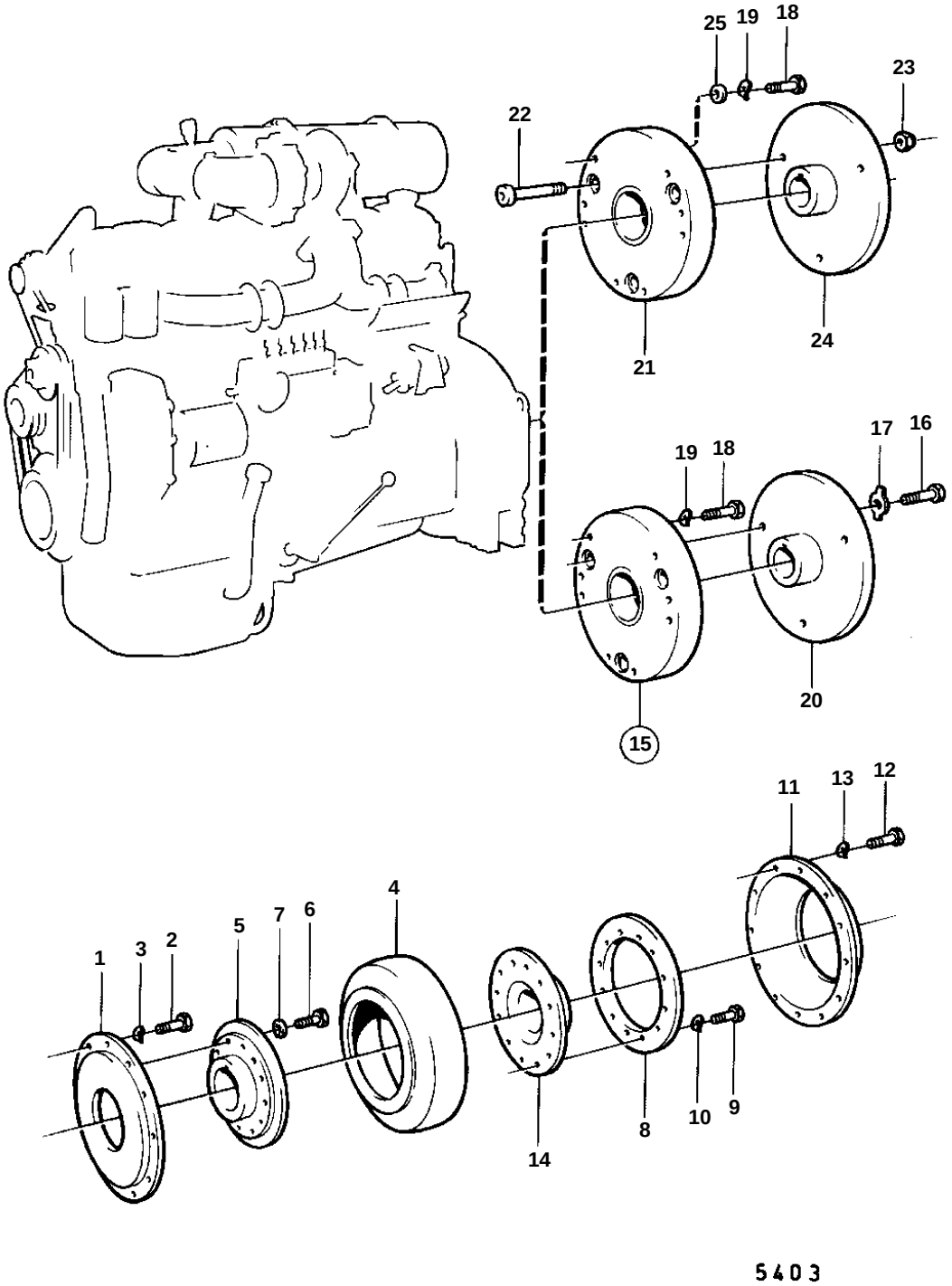

REF	PART NO.	QTY	DESCRIPTION		NOTES
1	896751	1	Companion flange		ALT
2	955562	8	Screw		ALT
3	940280	8	Spring washer		ALT
4	807666	1	Rubber element		ALT
5	801663	1	Clamping ring		ALT
6	190522	12	Screw		ALT
7	940143	12	Lock washer		ALT
8	807674	1	Clamping ring		ALT
9	955366	12	Screw		ALT
10	941912	12	Spring washer		ALT
11	898425	2	Protecting casing		ALT
12	940134	12	Screw		ALT
13	941909	12	Spring washer		ALT
14	899953	1	Clutch flange		ALT
15	899065	1	Flexible coupling		EARLY TYPE. MD1B SPEC 867001, 867002, 867140, 867141. MD2B SPEC 867007, 867007, 867008, 867120, 867143, 867144. MD3B SPEC 9981.. MD1B SPEC 897142, 867229. MD2B SPEC 867122, 867230,. MD11 SPEC 867208. MD5A. MD6A SPEC 867149, 867217, 867233, 867234. MD6B SPEC 867309, MD7. MB10 SPEC 867047, 867191, 867254.
16	899675	3	· Screw		EARLY TYPE. MD1B SPEC 867001, 867002, 867140, 867141. MD2B SPEC 867007, 867007, 867008, 867120, 867143, 867144. MD3B SPEC 9981.
17	899676	3	· Washer		EARLY TYPE. MD1B SPEC 867001, 867002, 867140, 867141. MD2B SPEC 867007, 867007, 867008, 867120, 867143, 867144. MD3B SPEC 9981.
18	955541	8	Screw		EARLY TYPE
	955541	6	Screw		LATE TYPE
19	942336	8	Spring washer		EARLY TYPE
	942336	6	Spring washer		LATE TYPE
20	820590	1	Companion flange		EARLY TYPE SPEC.9929. MD3B SPEC 867146.
	820591	1	Companion flange		MD17 SPEC 867340.
25	940097	6	Washer		